1.

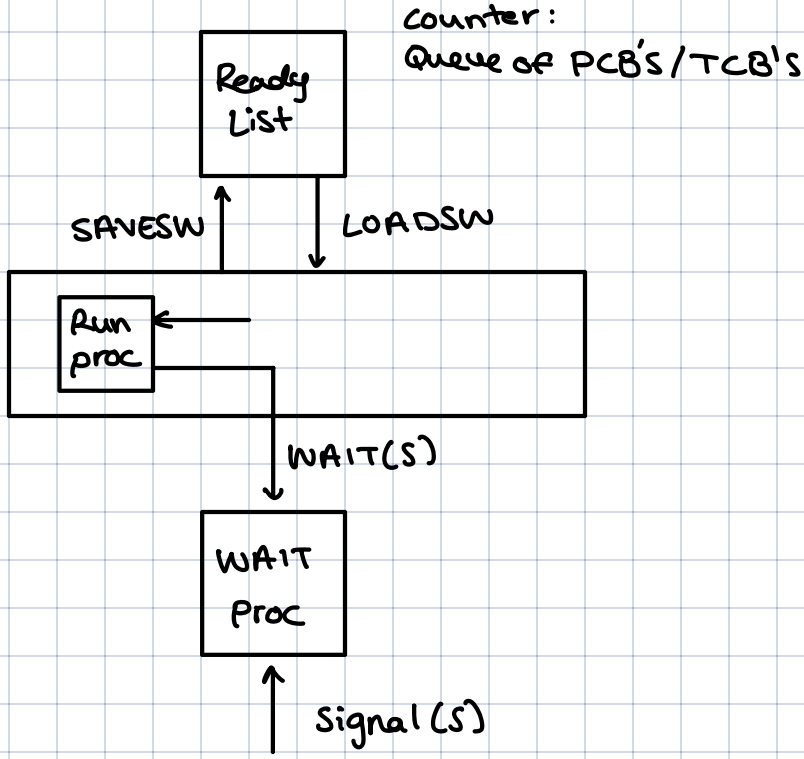

2. Before context switch

CPU: P4 running

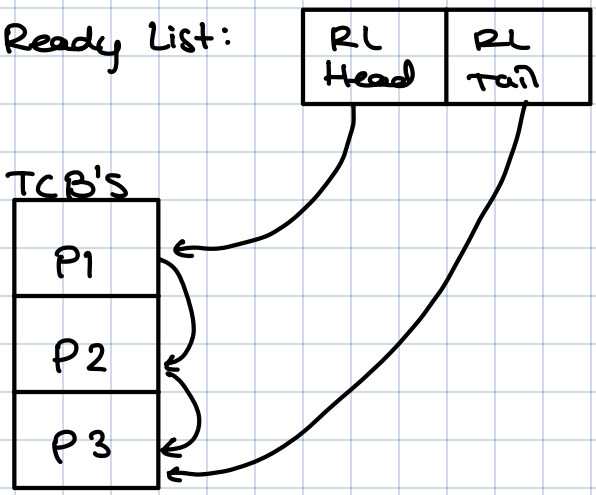

After context switch

CPU: P1 running

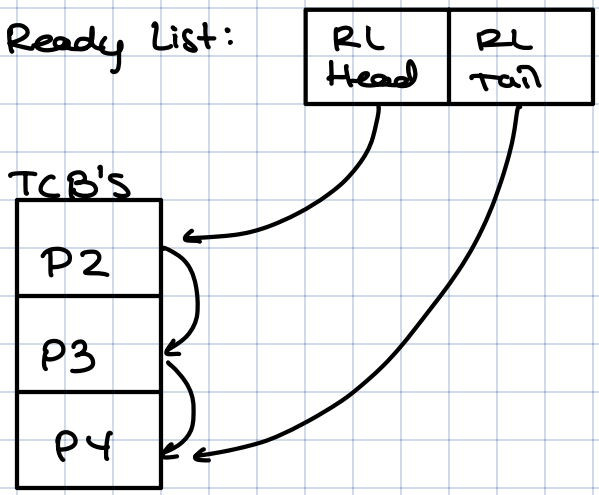

3.

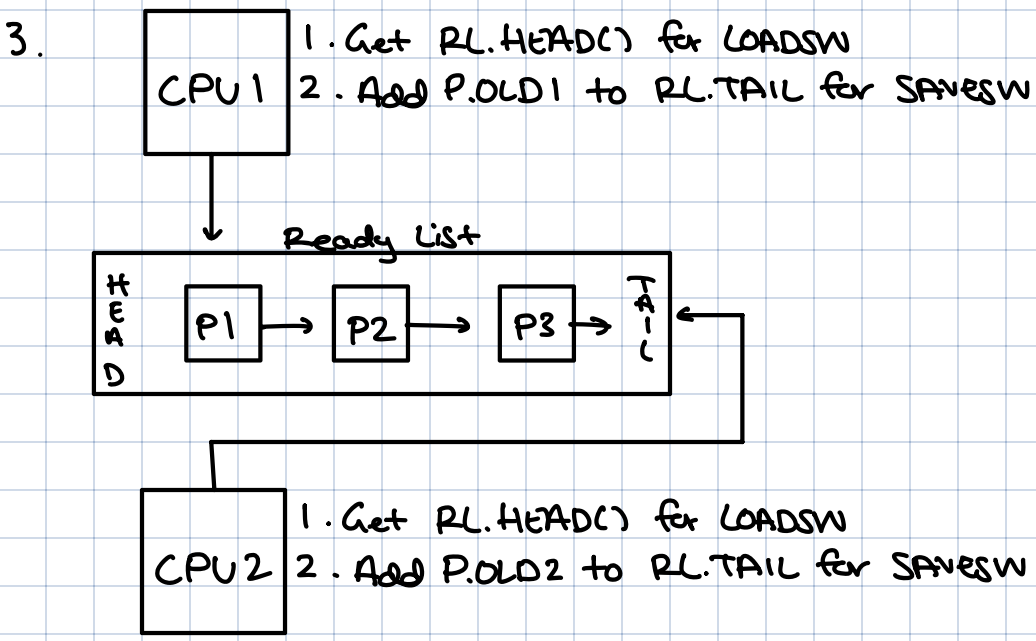

Spinlock:
RL_lock = 0 (unlocked)

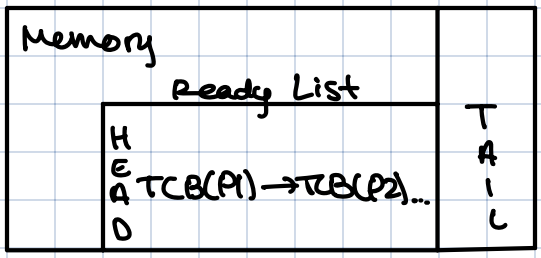

CPU1 gets lock → CPU 2 waits

CPU1 : Running Process X	CPU2 : Running Process Y
1. TSL (RL_lock) → Reads 0, sets to 1 locked 2. Enter Critical Section - SAVESW PX → TCB PX - Update TCB(PX-1)'s link to TCB(PX) - Set TCB(PX) next pointer set to NULL - Update RL.HEAD to TCB(P2) - LOADSW (P1 state goes into CPU 1) 3. RL_lock = 0	1. TSL (RL_lock) reads 1 2. Spins until value of RL_lock changes to 0 3. (CPU 1 releases lock) → TSL(RL_lock). RL_lock now 0 so can enter 4. Enter critical section and modify RL